Toslink Optical Signal Extension Amplifier

OWNER'S MANUAL — Please read before using this equipment.

Your RadioShack Toslink Optical Signal Extension Amplifier minimizes optical signal loss when you use long lengths of fiber-optic cable to connect optical digital-audio devices, such as a compact disc (CD), digital video disc (DVD), or mini-disc (MD) player. It amplifies weak signals, resulting in improved quality output.

CONNECTION

You must power the extension amplifier using the supplied 6V, 250-mA AC adapter.

Cautions:

You must use a Class 2 power source that supplies 6V DC and delivers at least 250 mA. Its center tip must be set to positive and its plug must fit the extension amplifier's **DC 6V** jack. The supplied adapter meets these specifications. Using an adapter that does not meet these specifications could damage the extension amplifier or the adapter.

- Always connect the AC adapter to the extension amplifier before you connect it to AC power. When you finish, disconnect the adapter from AC power before you disconnect it from the extension amplifier.

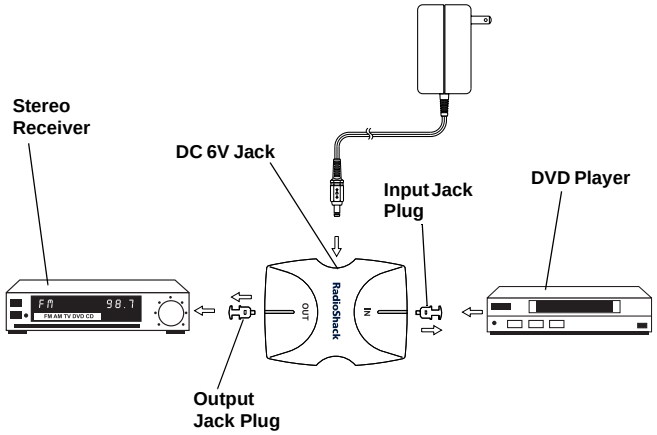

Note: Before connecting the extension amplifier to your digital audio equipment:

- Remove the plastic plugs that protect the extension amplifier's input (**IN**) and output (**OUT**) Toslink jacks from dust and debris.
- Remove the cable end protectors from the Toslink connectors on your fiber-optic cables (not supplied).

1. Using a fiber-optic cable with a Toslink connector at both ends (available at your local RadioShack store), connect the optical output from your digital audio equipment (such as a CD, DVD, or MD player) to the extension amplifier's **IN** jack.

   Note: The input cable length should not exceed 16 feet (4.88 meters).

2. With another fiber-optic cable (not supplied), connect the extension amplifier's **OUT** jack to the optical input of your digital audio equipment (such as a stereo receiver).

   Note: The output cable length should not exceed 65 feet (19.8 meters).

3. Connect the AC adapter's barrel plug to the extension amplifier's **DC 6V** jack, then connect the adapter's AC plug to a standard AC outlet. Your extension amplifier is ready for use with the connected audio equipment.

CARE

To enjoy your extension amplifier for a long time:

- Keep the extension amplifier dry. If it gets wet, wipe it dry immediately.
- Use and store the extension amplifier only in normal temperature environments.
- Handle the extension amplifier gently and carefully. Do not drop it.
- Keep the extension amplifier away from dust and dirt.
- Wipe the extension amplifier with a damp cloth occasionally to keep it looking new.

Modifying or tampering with the extension amplifier's internal components can cause a malfunction and might invalidate its warranty. If your extension amplifier is not performing as it should, take it to your local RadioShack store for assistance.

SPECIFICATIONS

Signal Amplification	4.5 dB (Minimum)
AC Input	AC 120V, 60 Hz, 5W
DC Output	DC 6V, 250 mA
Connection Plug Type	Toslink

Specifications are typical; individual units may vary. Specifications are subject to change and improvement without notice.

RadioShack®
www.radioshack.com℠

© 2000 Tandy Corporation.
All Rights Reserved.
RadioShack and RadioShack.com are trademarks used by Tandy Corporation.

Limited Ninety-Day Warranty

This product is warranted by RadioShack against manufacturing defects in material and workmanship under normal use for ninety (90) days from the date of purchase from RadioShack company-owned stores and authorized RadioShack franchisees and dealers. EXCEPT AS PROVIDED HEREIN, RadioShack MAKES NO EXPRESS WARRANTIES AND ANY IMPLIED WARRANTIES, INCLUDING THOSE OF MERCHANTABILITY AND FITNESS FOR A PARTICULAR PURPOSE, ARE LIMITED IN DURATION TO THE DURATION OF THE WRITTEN LIMITED WARRANTIES CONTAINED HEREIN. EXCEPT AS PROVIDED HEREIN, RadioShack SHALL HAVE NO LIABILITY OR RESPONSIBILITY TO CUSTOMER OR ANY OTHER PERSON OR ENTITY WITH RESPECT TO ANY LIABILITY, LOSS OR DAMAGE CAUSED DIRECTLY OR INDIRECTLY BY USE OR PERFORMANCE OF THE PRODUCT OR ARISING OUT OF ANY BREACH OF THIS WARRANTY, INCLUDING, BUT NOT LIMITED TO, ANY DAMAGES RESULTING FROM INCONVENIENCE, LOSS OF TIME, DATA, PROPERTY, REVENUE, OR PROFIT OR ANY INDIRECT, SPECIAL, INCIDENTAL, OR CONSEQUENTIAL DAMAGES, EVEN IF RadioShack HAS BEEN ADVISED OF THE POSSIBILITY OF SUCH DAMAGES.

Some states do not allow limitations on how long an implied warranty lasts or the exclusion or limitation of incidental or consequential damages, so the above limitations or exclusions may not apply to you.

In the event of a product defect during the warranty period, take the product and the RadioShack sales receipt as proof of purchase date to any RadioShack store. RadioShack will, at its option, unless otherwise provided by law: (a) correct the defect by product repair without charge for parts and labor; (b) replace the product with one of the same or similar design; or (c) refund the purchase price. All replaced parts and products, and products on which a refund is made, become the property of RadioShack. New or reconditioned parts and products may be used in the performance of warranty service. Repaired or replaced parts and products are warranted for the remainder of the original warranty period. You will be charged for repair or replacement of the product made after the expiration of the warranty period.

This warranty does not cover: (a) damage or failure caused by or attributable to acts of God, abuse, accident, misuse, improper or abnormal usage, failure to follow instructions, improper installation or maintenance, alteration, lightning or other incidence of excess voltage or current; (b) any repairs other than those provided by a RadioShack Authorized Service Facility; (c) consumables such as fuses or batteries; (d) cosmetic damage; (e) transportation, shipping or insurance costs; or (f) costs of product removal, installation, set-up service adjustment or reinstallation.

This warranty gives you specific legal rights, and you may also have other rights which vary from state to state.

RadioShack Customer Relations, 200 Taylor Street, 6th Floor, Fort Worth, TX 76102

We Service What We Sell *12/99*

RadioShack
A Division of Tandy Corporation
Fort Worth, Texas 76102

15-1588
05A00
Printed in China